Introduction

The process of modulating amplitude or frequency or phase of the carrier signal with respect to the voltage of the message sequence before transmitting over a bandpass channel is called Digital Bandpass Modulation (DBM). Objective of the following laboratory exercises is to generate and analyze various types of DBM. DBM techniques implemented in the following sections are: Amplitude Shift Keying (ASK), Frequency Shift Keying (FSK) and Phase Shift Keying (PSK). These laboratory experiments illustrate digital modulation concepts. ASK modulation, demodulation and FSK modulation, FSK demodulation and BPSK modulation and demodulation are demonstrated. The spectrum for each modulation is measured.

A.3 - Digital Bandpass Modulation

A.3.1. Experimental Setup for ASK Modulation

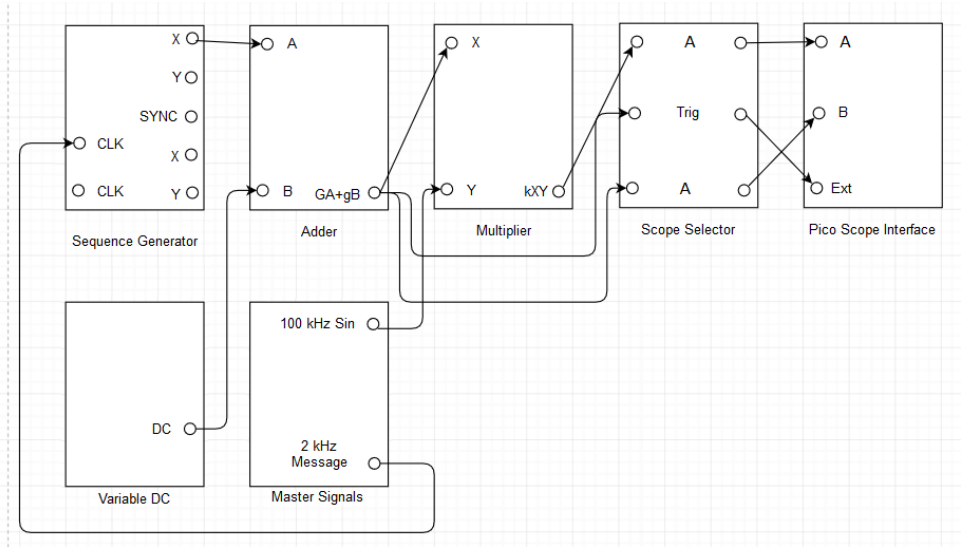

Figure A.3.1: ASK modulator setup.

A.3.2. Laboratory Exercise for ASK Modulation

i. Make the modulator setup as shown in Figure A.3.1.

ii. Toggle the front panel switch of the multiplier to DC. Turn both the knobs of the adder to maximum and turn the knob of the variable DC to minimum.

iii. Adjust the knob of the variable DC and the message sequence at the adder to obtain a unipolar message sequence between 0 V and +2 V amplitude.

iv. Take a screenshot of output of the multiplier and output of the adder under the scope mode.

v. Unplug the signal from output of the sequence generator to input of the adder. Plug the signal from 8.3 kHz sample TTL clock of the master signals to input of the adder. Repeat step **iii** and step **iv**, accordingly.

vi. Take a screenshot of the spectrum of the ASK modulated signal.

A.3.3. Experimental Setup for ASK Demodulation

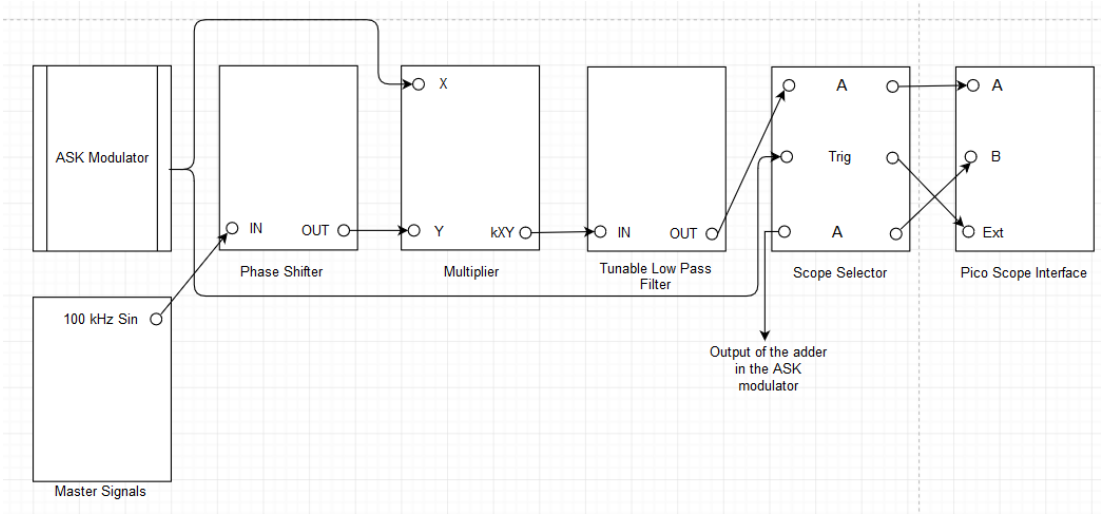

Figure A.3.2: ASK demodulator setup.

A.3.4. Laboratory Exercise for ASK Demodulation

i. Retain the modulator setup and make the demodulator setup as shown in Figure A.3.2.

ii. Toggle the front panel switch of the TLPF to wide and toggle the front panel switch of the multiplier at the demodulator to DC. Turn both the knobs of the TLPF to minimum and turn both the knobs of the phase shifter to minimum.

iii. Adjust both the knobs of the TLPF and both the knobs of the phase shifter to obtain the demodulated message sequence with minimum phase shift and equal amplitude. NOTE: If the demodulated message sequence is inverted with respect to the message sequence, then toggle the front panel switch of the phase shifter.

iv. Take a screenshot of output of the TLPF and output of the adder under the scope mode.

v. Unplug the signal from 8.3 kHz sample TTL clock of the master signals to input of the adder. Plug the signal from output of the sequence generator to input of the adder. Repeat step **iii** and step **iv**, accordingly.

vi. Observe that the demodulated message sequence is not similar to the message sequence. What does it signify?

A.3.5. Experimental Setup for FSK Modulation

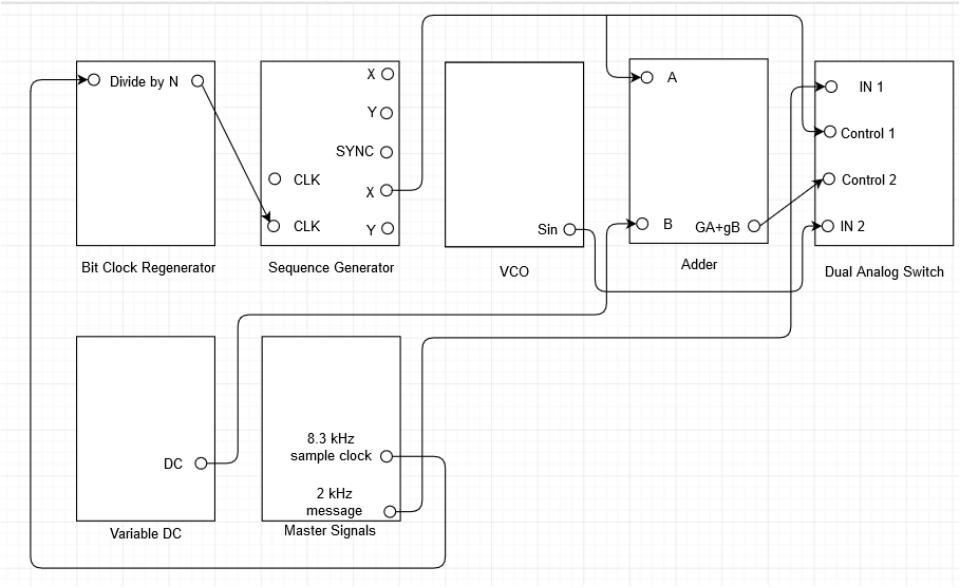

Figure A.3.3: FSK modulator setup.

A.3.6. Laboratory Exercise for FSK Modulation

NOTE: Refer the user manual to learn about the features of Bit Clock Regenerator (BCR).

i. Toggle the on-board switch-SW2 of the VCO to VCO and toggle the front panel switch of the VCO to LO.

ii. Adjust the frequency knob of the VCO to generate 5.21 kHz sine signal.

iii. Make the modulator setup as shown in Figure A.3.3.

iv. Toggle both the pins of the on-board switch-SW2 of the BCR down. Turn both the knobs of the adder to minimum and turn the knob of the variable DC to minimum.

v. View the signals from output of the adder and output of the sequence generator.

vi. Adjust both the knobs of the adder to obtain a unipolar inverted message sequence between 0 V and +5 V amplitude.

vii. Observe that two unipolar message sequences of equal amplitudes and opposite polarities are generated by the sequence generator and the adder.

viii. Take a screenshot of output of the adder and output of the sequence generator under the scope mode.

ix. Switch to view the signals from output of the DAS and output of the sequence generator.

x. Take a screenshot of output of the DAS and output of the sequence generator under the scope mode.

xi. Switch to view the signals from output of the DAS and output of the adder.

xii. Take a screenshot of the DAS and output of the adder under the scope mode.

xiii. Take a screenshot of the spectrum of the FSK modulated signal.

A.3.7. Experimental Setup for FSK Demodulation

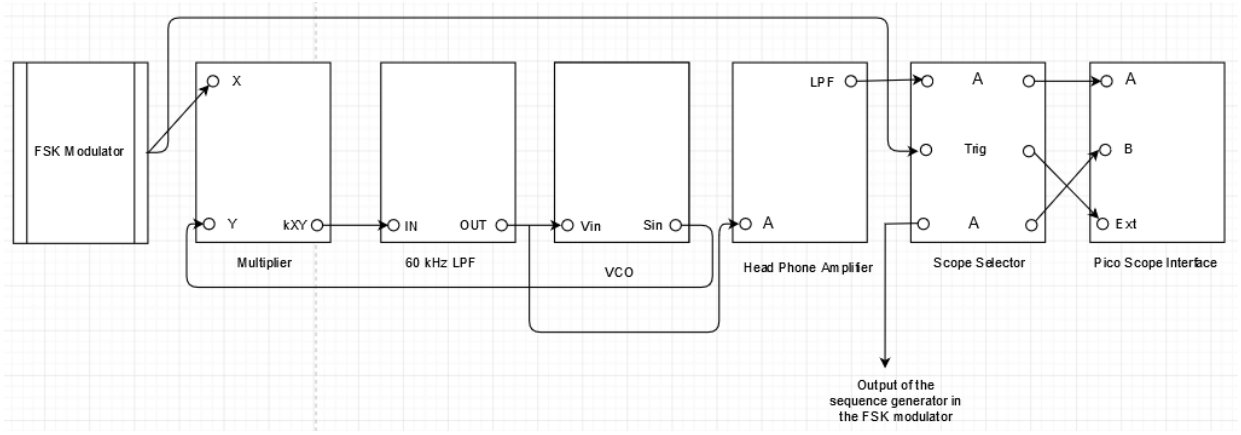

Figure A.3.4: FSK demodulator setup.

A.3.8. Laboratory Exercise for FSK Demodulation

i. Retain the modulator setup and make the demodulator setup as shown in the Figure A.3.4.

ii. Toggle the on-board switch-SW2 of the VCO at the demodulator to VCO, toggle the front panel switch of the VCO at the demodulator to LO, toggle the front panel switch of the multiplier to DC and toggle the front panel switch of the headphone amplifier to IN. Turn both the knobs of the VCO at the demodulator to minimum and turn the knob of the 60 kHz LPF to minimum.

iii. Adjust the PLL setup to obtain the demodulated message sequence with minimum phase shift and equal amplitude.

iv. Take a screenshot of output of the LPF at the headphone amplifier and output of the sequence generator under the scope mode.

A.3.9. Experimental Setup for BPSK Modulation

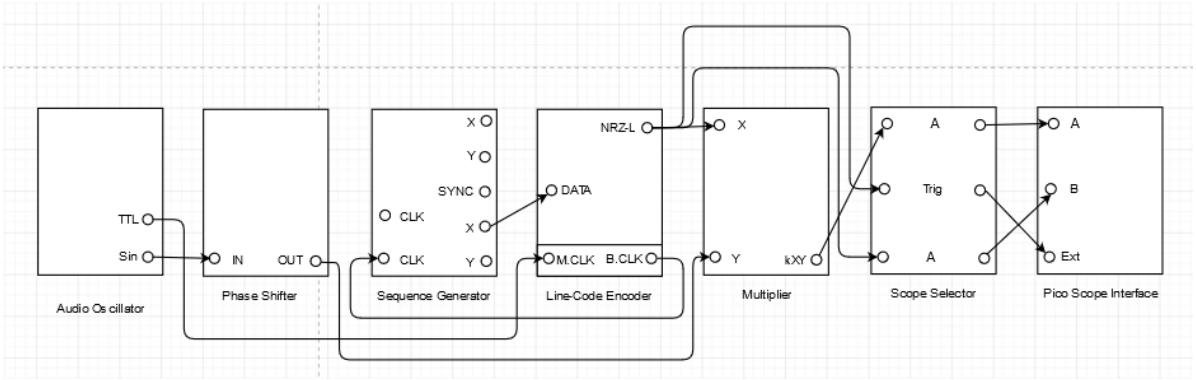

Figure A.3.5: BPSK modulator setup.

A.3.10. Laboratory Exercise for BPSK Modulation

NOTE: Refer the user manual to learn about the features of Line Code Encoder (LCE).

- **i.** Set an audio oscillator to generate 8 kHz sine signal.
- **ii.** Make the modulator setup as shown in the Figure A.3.5.
- **iii.** Toggle the on board switch-frequency range of the phase shifter to LO, toggle the front panel switch of the phase shifter down and toggle the front panel switch of the multiplier to DC. Turn both the knobs of the phase shifter to minimum.
- **iv.** Slowly increase both the knobs of the phase shifter from minimum to maximum to observe the 180° phase difference between the adjacent states.
- **v.** Turn both the knobs of the phase shifter to minimum.
- **vi.** Take a screenshot of output of the multiplier and output of the NRZ-L at the LCE under the scope mode.
- **vii.** Take a screenshot of the spectrum of the BPSK modulated signal.

A.3.11. Experimental Setup for BPSK Demodulation

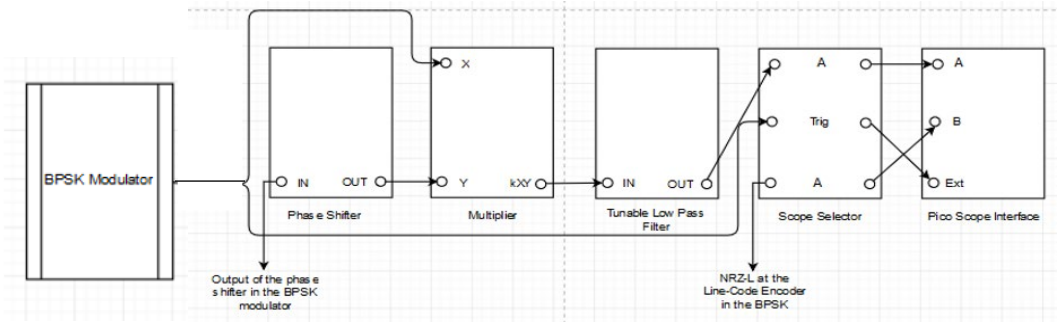

Figure A.3.6: BPSK demodulator setup.

A.3.12. Laboratory Exercise for BPSK Demodulation

i. Retain the modulator setup and make the demodulator setup as shown in Figure A.3.6.

ii. Toggle the front panel switch of the multiplier at the demodulator to DC, toggle the front panel switch of the phase shifter at the demodulator down and toggle the front panel switch of the TLPF to wide. Turn both the knobs of the phase shifter at the demodulator to minimum, turn both the knobs of the TLPF to minimum.

iii. Adjust both the knobs of the TLPF to obtain the demodulated message sequence with minimum phase shift and equal amplitude.

iv. Take a screenshot of output of the TLPF and output of the NRZ-L at the LCE under the scope mode.